GIULINI G.
RUBINETTERIA

NEW

100% MADE IN ITALY
IT01
IT01.IT/111.111.A

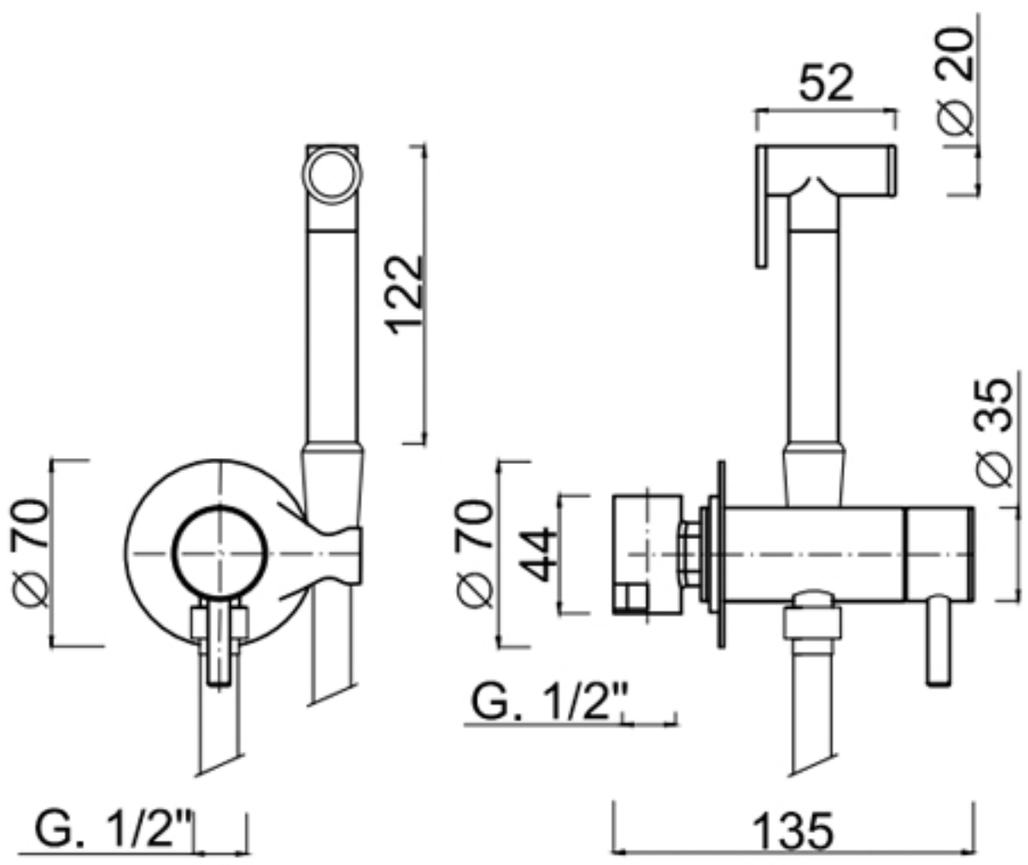

150 €

363 €

260 €

305 €

305 €